IEE ISRAEL, IEE CYPRUS, IEE HELLAS ASSOCIATION OF ENGINEERS and ARCHITECTS IN ISRAEL
In cooperation with
IEEE ISRAEL

Med Power 2000

November 13-15, 2000

Coastal Contamination of the High Voltage Insulators in the Cretan Power Transmission System.

K. Siderakis[(1)], J. Stefanakis[(2)], E. Thalassinakis[(2)], D. Agoris[(1)], E. Dialynas[(3)]

[(1)] University of Patras, High Voltage Laboratory, Electrical and Computer Engineering Department, Patras, Rio, 26500, Greece, **dagoris @ ee.upatras.gr**
[(2)] Public Power Corporation of Greece, Greece
[(3)] National Technical University of Athens, Electrical and Computer Engineering Department, Greece

Abstract: The high voltage network of Crete consists of overhead transmission lines of 66kV and 150kV, which have been constructed close to the seashore. From the first steps of network development, its high voltage insulators, which mainly are from glass and porcelain, suffer coastal contamination. Several methods have been applied in order to overcome the problem, among them the live and dead washing, the experimental application of RTV coatings and a pilot installation of composite insulators. Furthermore, ESDD measurements have been performed in an effort to determine the nature of the contaminants. Meanwhile, a research program for the complete investigation of the problem has started. A number of different types of composite insulators will be installed in various places of the power transmission system with continuous recording of their leakage current. At the same time period temperature profile recording on certain insulators will take place, as well as periodical ESDD measurements and laboratory testing of the same insulators, in an effort to identify the critical parameters, which when measured in the high voltage laboratory may give a good approximation of the phenomena happened in the network.

Keywords: insulator, coastal contamination, island, Crete, high voltage, transmission network.

1. INTRODUCTION

Crete is one of the biggest islands in the Mediterranean and the biggest among the Greek islands. It is the southern most part of Greece and the southern part of the European Union. Due to it's elongated shape (260km from east to west with a mean value of width 32km and more than 1000km coastline) it is totally exposed to marine influence, which is the base of the economical development of the island. Marine influence is also the cause of serious problems, regarding the high voltage insulators of its electricity transmission system, due to coastal contamination.

The contamination problem appeared from the first steps of the development of the Cretan 66kV transmission system, which was constructed, on wooden poles with wooden traverses from where the insulator springs were suspended. Because of leakage currents, owing to the pollution of the insulators, their wooden structure was sometimes severely burned.

Coastal contamination leading to flashover was experienced as well as the first 150kV transmission lines came into service, at the eastern side of the island, in the early 70's. Due to its route along the northern coastline it was exposed to severe marine influence. Although it was over- insulated, with a

creepage distance of 4,56 cm/kV, the line itself and the whole system suffered from numerous disturbances and in some cases interruptions during autumn evenings.

2. THE PARAMETERS OF THE PROBLEM

In Crete, there is a unique combination of parameters that have an effective influence to the coastal contamination phenomenon of high voltage insulators.

2.1 Meteorological conditions

The precipitation in Crete, although is on average higher than that of mainland (Greece), is distributed unevenly through the year, resulting to a dry period of 6 to 7 months, beginning from the end of April until October (or more like 1993). During this dry period, strong and persistent north winds blow in the Aegean, affecting Crete and especially the East side of the island. They usually blow during the day and stop at night contributing to the formation of dew, which is another parameter that affects the contamination phenomenon.

2.2 Environmental conditions

Crete is a mountainous island with three main mountain formations along the 260km of length from east to west. Due to the mountainous environment, many different microclimatic conditions exist along the routes of the transmission lines, which influence the insulators contamination phenomenon in a positive or negative manner. For example, dew formation is more intensive in low valleys and plains than in high hills. Also human oriented pollution such as industrial, vehicles, dirty roads etc is found around urban areas and not on isolated areas. Additionally, the coast of Crete is very rocky and rough. This fact, in combination with the strong north winds, results to the formation of large amounts of seawater spray, which can be airborne far beyond its formation site.

2.3 Island topology

Because of the mountains, the most populated areas are near the coast and especially at the north side of the island, which faces Aegean Sea. Consequently, the main need of electrical energy is at the north side where the four biggest cities on the island exist. Thereby, 75% of the high voltage transmission network of the island is developed at the north side, where the two power stations, one in Iraklion and one in Chania, are built as well. On the north side, are also located 11 out of the 13 High Voltage Substations 66kV and 150kV, and the largest part of the distribution overhead lines.

3. MECHANISM OF SALT ACCUMULATION ON THE INSULATORS

During the daytime the strong north winds in combination with the rocky coast result to the formation of a salty water spray, which is transported to the inland by wind and deposited on the insulator's surface. Owning to the high daytime temperature the water evaporates and pure salt mixed with dust rests on the surface, forming a dirty film. In the absence of humidity nothing happens but when it appears because of dew during the night (very often in Crete at the end of the summer and during the autumn) or because of light rain, flashes often occur leading to several disturbances and even interruptions.

It is important to notice the difference between the West and the East side of the island regarding the contamination phenomenon. Crete can be divided in to a contamination free area at the West side and an area with severe contamination problems at the East side. It is indicative that from 1978 until 1993, 216 faults took place at the 276km overhead 150kV transmission lines (TL's) of the eastern Crete, instead of 1 fault at the 132km of the western Crete. This means 0,0756 faults/km on the west side instead of 0,7826 faults/km on the east side, although on the east side took place very often and extensive cleaning activities.

The creepage distance is a very important parameter. In the Cretan transmission system, the creepage distance varies between 3,2 cm/kV in the contamination free Western Crete and 4,56 cm/kV in the Eastern Crete. Nevertheless contaminations faults have taken place at the most eastern transmission line, despite being over-insulated and cleaned twice during the summer period. On the contrary the most western line although never being cleaned it has been until now fault free, regarding contamination. This leads us to the conclusion that creepage distance although it is very important, is not he only parameter that must be taken into account. Our experience until now shows that insulator geometry is just as much important and insulator profile has a great influence on its performance regarding salt accumulation.

4. FACING COASTAL CONTAMINATION PROBLEM OF INSULATORS IN CRETE

Facing the problem of coastal contamination of the high voltage insulators is very important for the reliable operation of the system. After studying the problem three methods are applied simultaneously

- Prevention
- Suppression
- Research

Among preventing methods, the daylight inspection as well as during the night under dew conditions, the E.S.D.D measurements, and the pollution oriented planning of transmission lines and substations are mentioned. Among suppressive methods, dead and live cleaning of the insulators and the application of RTV coatings are the most important. As far as it concerns research, an important program has recently started about the behavior of various types of composite insulators and RTV coatings

5. POLLUTION ORIENTED PLANNING

Regarding substations, pollution oriented planning means constructing enclosed substations (conventional or GIS). Thereby the low voltage side of 9 substations built within 1975 to 1980 is enclosed in buildings with metalclad panels. Additionally, the planning of the high voltage side permits washing in two parts by installing sectionalizing disconnectors in proper places of bus bars, improving the reliability of the system with the lowest possible consequences to the consumer.

Regarding transmission lines, pollution oriented planning means insulator's type and profile insulation level, and routing. The application of composite insulators for a new transmission line has been decided, as well as a in depth research concerning the behavior of various profiles and types of composite insulators Furthermore, the route of new transmission lines is avoiding areas with experience of severe coastal contamination.

6. CLEANING OF INSULATORS

Starting from the summer of 1978, dead washing of the insulators at the locations where the problem was encountered, using water, buckets and sponges had been applied. Since the productivity of such method was low, the next step was dead washing on insulators using water jets, a method that was already applied at the substations. From 1995 live water washing with the use of a helicopter has been applied. The use of a helicopter makes the procedure faster but also adds some (more or less serious) problems. Washing must be carried out while the weather permits safe flying. Unfortunately, during the "high pollution" season, strong north winds are very often. This implies many delays to the helicopter washing procedure and a consequent risk for the reliable operation of the transmission grid. Apart from the appropriate flying weather another requirement of the method is "space". A helicopter, in order to fly safely needs space. So, some towers owing to their vicinity to other towers or structures were excluded from the washing procedure. Furthermore, it was noticed that some of the insulators in the middle phase of "V" type single circuit towers, were not perfectly cleaned. Since washing is carried out under voltage, the possibility of a fault exists. Out of 5000 insulators that were washed, 3 faults occurred with serious consequences to the performance of the transmission system.

The determination of the exact washing time and place is very important for the reliable operation of the system. Washing activities needed are not periodic, which means that we should always be on alert and have in mind that one of the most important parameters of the problem is weather. For example, rain can do the washing in time but on the other hand strong north winds can create problems even during the winter. Up to now decision making for washing was based on experience Nevertheless, considering the importance of the situation, knowledge in depth is necessary in order to face the problem. Measurements and research of the phenomenon lead to that direction.

7. APPLICATION OF COATINGS

The use of silicone grease has been a practice for several years as an effective anti-pollution measure. Unfortunately it is a labor-intensive method and is not agreeable to the available personnel. Thereby the application of it was restricted to very special cases, such as sensitive elements of step up transformer gates, bushings, surge arrestors etc. The need of regreasing every 6-12 months lead to the use of more permanent types of coatings i.e. RTV's.

8. RESEARCH

Having in mind the importance of the coastal contamination problem to the exploitation of the transmission system of Crete, the better understanding of the phenomenon is increasingly

necessary. The experience gained all these years, in combination with laboratory measurements and research can result to a complete investigation of the problem. In this direction, Public Power Corporation has established a research project in collaboration with the High Voltage Laboratory of Patras University for the in depth study of the insulators contamination in the Cretan transmission network (field) and in the high voltage laboratory. Glass, ceramic, RTV coated and composite insulators of various profiles and materials will be monitored for at least three years. Each type will be installed in an operated transmission line in three different conditions. Energized and contamination exposed with and without leakage current recording and not energized but contamination exposed. Some oh the above insulators will be transferred to the high voltage laboratory of the University of Patras for tests. Additionally, one set of each type of insulators will be used as research object for measurements in the high voltage laboratory and another set will be kept stored as reference. The purpose of these tests and measurements is to examine the influence of each parameter, to the contamination process

Field research will be mainly based on leakage current measurements. A network of Data Acquisition Systems (DAS) will be developed in order to record leakage currents on different type of insulators. At the beginning (DAS) has been installed at a 150kV/20kV substation and afterwards at transmission lines. At the same period, meteorological parameters such as wind (speed, direction, and duration), precipitation, temperature and humidity will be recorded (see Figure 1). During measurements and chemical analyses will take place regarding the type and the characteristics of the pollutant, and the behavior of the insulator (for example the temperature profile).

Field and laboratory measurements will be considered together with the feedback relation that exists between them, as long as computer simulation of the phenomenon, will give the opportunity to compose an identity for each insulator type, regarding its behavior in coastal contamination.

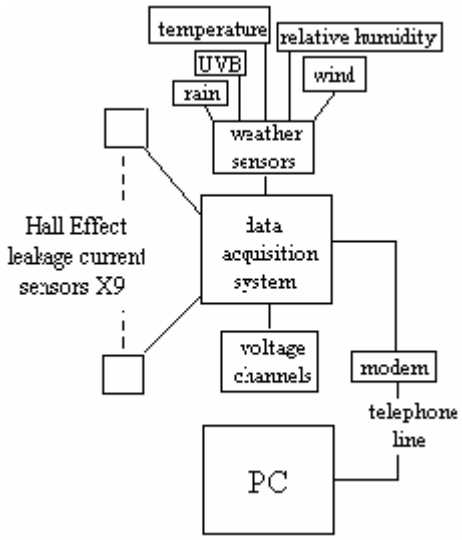

Figure 1: The Data Acquisition System (DAS)

9. CONCLUSIONS

Coastal contamination in the Cretan high voltage transmission network that appeared from the first steps of its development consists a major problem, for the reliable operation of the system, especially during the autumn. However, it is faced systematically, by prevention, by suppressive actions and by research. All these years we moved from the restoring of the damage to the preventive confrontation of the problem. At the moment we are in control of the problem, and an in depth research program concerning the behavior of various types of composite insulators is beginning. After the research is completed, interesting results are expected which will be applicable further to Crete and at other areas of Greece where coastal contamination of the insulators in the high voltage transmission network is noted.

10. REFERENCES

1. J. N. Stefanakis: “Impact of sea pollution in the transmission system of Crete”, Session Patras ‘96, Greek National Committee for Cigre, 1996